wieland

Data sheet

Commercial Art.No.: 96.030.0153.1

Distributor RST20I3V 3P1 F V SW

RST20i3 distribution block, 3 pole, application 250V with PE, 20A, 1 input and 3 outputs, with fastening option, coding color black, color of housing black

Commercial Art.No.	96.030.0153.1
EAN	4015573735248
Order Unit	1

Certificates / Approvals

Technical data

General

Rated current	20 A
Rated voltage	250 V
Rated impulse voltage	4 kV
Pollution degree	3
Lockable	self-locking (unlocking by tool)
Color of coding/ contact carrier	black
Marking of poles	L, N, PE

Model

Number of inputs	1
Number of outputs	3
Type of fastening	yes
Degree of protection (IP)	IP66/68 (3m;2h) /IP69
Type of distributor	Distribution block

Material

Housing material	Polyamide
halogen free	yes
Contact material	CuZn
Fire load	0.23 kWh
Insulation components continous temperature	100 °C
Surface finish	Silver-plated

Dimensions

Length	55.5 mm

Сайт: https://samoreg.ru | Телефон: +7 (343) 237-25-22 | Почта: 1@2372522.ru

Width	85.8 mm
Height	31.3 mm

Classification

ECLASS 11	
ECLASS 8.1	27440603
ETIM 7.0	EC002567
ETIM 6.0	EC002567
ETIM 5.0	EC002567
ETIM 4.0	EC002567

Product compliance

ROHS conformity status	Compliant/Exempted
ROHS exceptions	III-6(c)
REACH-SVHC conformity status	Duty-To-Declare
REACH-SVHC substances	Lead
REACH-SVHC CAS numbers	7439-92-1

Accessories

Commercial Art.No.:	Article-type description:	Description:
05.564.4453.1	Cover for male connector SW	RST20i3/2 cover piece, for covering unused male connectors, color black
99.414.6205.2	Cover for female connector SW	RST20i3/2 cover piece, for covering unused female connectors, with fastening belt, color schwarz
99.416.6205.2	Cover for male connector SW	RST20i3/2 cover piece, for covering unused male connectors, with fastening belt, color black
Z5.564.4553.1	Cover for female connector SW	RST20i3/2 cover piece, for covering unused female connectors, color black

Fits with

Commercial Art.No.:	Article-type description:	Description:
96.031.0053.1	Connector RST20I3F B2 ZR1 SW	RST20i3 connector, 3 pole, female, spring clamp connection, application 250V with PE, 20A, for cable diameters 6-10mm, coding color black, color of housing black
96.032.0053.1	Connector RST20I3F S2 ZR1 V SW	RST20i3 connector, 3 pole, male, spring clamp connection, application 250V with PE, 20A, for cable diameters 6-10mm, coding color black, color of housing black
96.031.4053.1	Connector RST20I3S B1 ZR1 SW	RST20i3 connector, 3 pole, female, screw connection, application 250V with PE, 20A, for cable diameters 6-10mm, coding color black, color of housing black
96.032.4053.1	Connector RST20I3S S1 ZR1 V SW	RST20i3 connector, 3 pole, male, screw connection, application 250V with PE, 20A, for cable diameters 6-10mm, coding color black, color of housing black
96.031.0153.1	Connector RST20I3F B2 ZR2 SW	RST20i3 connector, 3 pole, female, spring clamp connection, application 250V with PE, 20A, for cable diameters 10-14mm, coding color black, color of housing black
96.032.0153.1	Connector RST20I3F S2 ZR2 V SW	RST20i3 connector, 3 pole, male, spring clamp connection, application 250V with PE, 20A, for cable diameters 10-14mm, coding color black, color of housing black

Сайт: https://samoreg.ru | Телефон: +7 (343) 237-25-22 | Почта: 1@2372522.ru

96.031.4153.1	Connector RST20I3S B1 ZR2 SW	RST20i3 connector, 3 pole, female, screw connection, application 250V with PE, 20A, for cable diameters 10-14mm, coding color black, color of housing black
96.032.4153.1	Connector RST20I3S S1 ZR2 V SW	RST20i3 connector, 3 pole, male, screw connection, application 250V with PE, 20A, for cable diameters 10-14mm, coding color black, color of housing black
96.031.4553.1	Connector RST20I3S B1 ZR3 SW	RST20i3 connector, 3 pole, female, screw connection, application 250V with PE, 20A, for cable diameters 14-18mm, coding color black, color of housing black
96.032.4553.1	Connector RST20I3S S1 ZR3 V SW	RST20i3 connector, 3 pole, male, screw connection, application 250V with PE, 20A, for cable diameters 14-18mm, coding color black, color of housing black
96.033.4053.1	Connector RST20I3S B1 YR1 SW	RST20i3 connector (90° angled), 3 pole, female, screw connection, application 250V with PE, 20A, for cable diameters 6-10mm, coding color black, color of housing black
96.034.4053.1	Connector RST20I3S S1 YR1 V SW	RST20i3 connector (90° angled), 3 pole, male, screw connection, application 250V with PE, 20A, for cable diameters 6-10mm, coding color black, color of housing black
96.033.4153.1	Connector RST20I3S B1 YR2 SW	RST20i3 connector (90° angled), 3 pole, female, screw connection, application 250V with PE, 20A, for cable diameters 10-14mm, coding color black, color of housing black
96.034.4153.1	Connector RST20I3S S1 YR2 V SW	RST20i3 connector (90° angled), 3 pole, male, screw connection, application 250V with PE, 20A, for cable diameters 10-14mm, coding color black, color of housing black
96.032.0253.1	Connector RST20I3F S2 ZRX V SW	RST20i3 splitter connector, 3 pole, male, spring clamp connection, application 250V with PE, 20A, for cable diameters 6-10mm, coding color black, color of housing black
96.031.4253.1	Connector RST20I3S B1 ZRX SW	RST20i3 splitter connector, 3 pole, female, screw connection, application 250V with PE, 20A, for cable diameters 6-10mm, coding color black, color of housing black
96.032.4253.1	Connector RST20I3S S1 ZRX V SW	RST20i3 splitter connector, 3 pole, male, screw connection, application 250V with PE, 20A, for cable diameters 6-10mm, coding color black, color of housing black
96.031.4353.1	Connector RST20I3S B1 ZRY SW	RST20i3 splitter connector, 3 pole, female, screw connection, application 250V with PE, 20A, for cable diameters 10-14mm, coding color black, color of housing black
96.032.4353.1	Connector RST20I3S S1 ZRY V SW	RST20i3 splitter connector, 3 pole, male, screw connection, application 250V with PE, 20A, for cable diameters 10-14mm, coding color black, color of housing black
96.032.4453.1	Connector RST20I3S S1 ZRW V SW	RST20i3 connector, 3 pole, male, screw connection, application 250V with PE, 20A, for illumination cable, coding color black, color of housing black
96.033.0053.1	Connector RST20I3F B2 YR1 SW	RST20i3 connector (90° angled), 3 pole, female, spring clamp connection, application 250V with PE, 20A, for cable diameters 6-10mm, coding color black, color of housing black
96.034.0053.1	Connector RST20I3F S2 YR1 V SW	RST20i3 connector (90° angled), 3 pole, male, spring clamp connection, application 250V with PE, 20A, for cable diameters 6-10mm, coding color black, color of housing black
96.033.0153.1	Connector RST20I3F B2 YR2 SW	RST20i3 connector (90° angled), 3 pole, female, spring clamp connection, application 250V with PE, 20A, for cable diameters 10-14mm, coding color black, color of housing black
96.034.0153.1	Connector RST20I3F S1 YR2 V SW	RST20i3 connector (90° angled), 3 pole, male, spring clamp connection, application 250V with PE, 20A, for cable diameters 10-14mm, coding color black, color of housing black
96.031.0253.1	Connector RST20I3F B2 ZRX SW	RST20i3 splitter connector, 3 pole, female, spring clamp connection, application 250V with PE, 20A, for cable diameters 6-10mm, coding color black, color of housing black

Сайт: https://samoreg.ru | Телефон: +7 (343) 237-25-22 | Почта: 1@2372522.ru

96.031.0353.1	Connector RST20I3F B2 ZRY SW	RST20i3 splitter connector, 3 pole, female, spring clamp connection, application 250V with PE, 20A, for cable diameters 10-14mm, coding color black, color of housing black

Сайт: https://samoreg.ru | Телефон: +7 (343) 237-25-22 | Почта: 1@2372522.ru

drawn construction:96.030.0153.0

Gezeichnete Ausführung: 96.030.0153.0

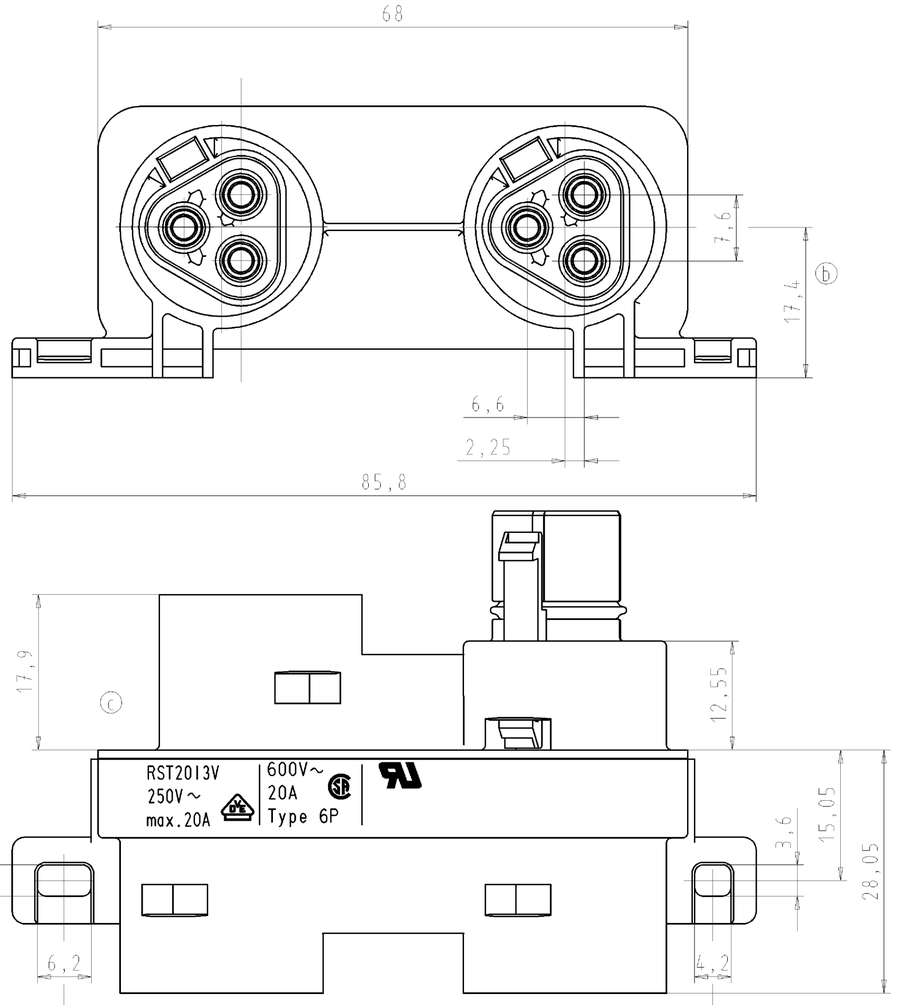

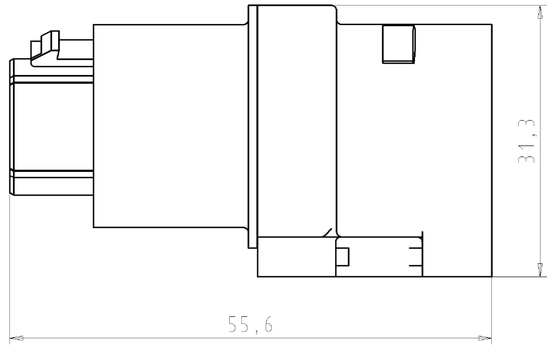

180°

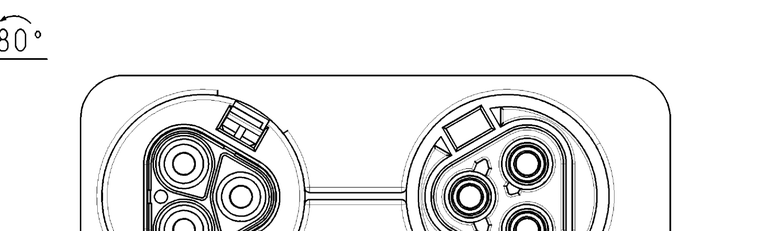

packaging unit: per 100

Verpackungseinheit: je 100 Stk.

scale 1:1

Maßstab 1:1

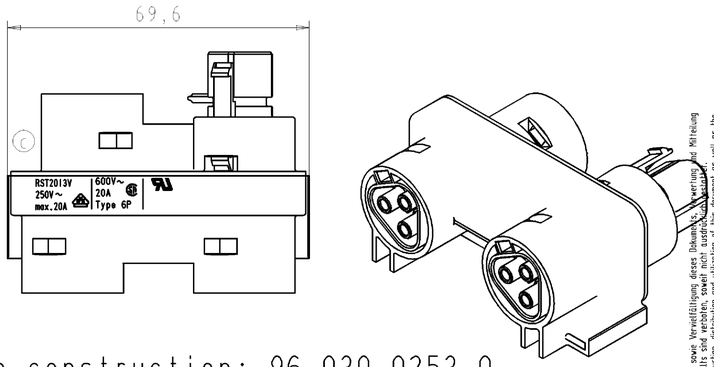

drawn construction: 96.030.0253.0

Ausführung: 96.030.0253.0

scale 1:1

Maßstab 1:1

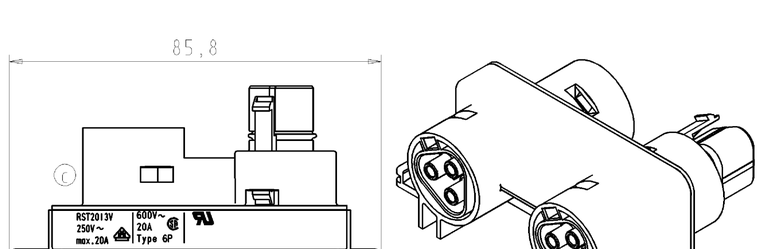

drawn construction: 96.030.0153.0

Ausführung: 96.030.0153.0

Teile-Nr.	Type	Farbe	Variante
96.030.0153.1	RST2013V_3P1_F_V__SW__	schwarz, ähnl. RAL 9005	mit Anschraubflansch
		black, similar to RAL 9005	with screwing flange
96.030.0153.0	RST2013V_3P1_F_V__GL__	grau, ähnl. RAL 7032	mit Anschraubflansch
		grey, similar to RAL 7032	with screwing flange
96.030.0253.1	RST2013V_3P1___V__SW__	schwarz, ähnl. RAL 9005	ohne Anschraubflansch
		black, similar to RAL 9005	without screwing flange
96.030.0253.0	RST2013V_3P1___V__GL__	grau, ähnl. RAL 7032	ohne Anschraubflansch
		grey, similar to RAL 7032	without screwing flange

Freitoleranz nach -

CAD - Zeichnung, keine manuellen Änderungen

1.Verwendung: -

Bl.: 1 von 1

	/	Maßstab	-	2003	Tag	Name	Zeichnung Nr.
	/	2:1		Entworfen	23.10.	Kneitz	T 96.030.0153.0 01K
	/			Geprüft	-	-	Index c
c	30.04.2009/	Vol. mm³	Oft. mm²	Normgepr.	-	-	Ersatz für: -
b	02.06.2004/	wieland Elektrische Verbindungen					Benennung
a	27.01.2004/						VERTEILER
Buchstabe	Datum / Blatt						DISTRIBUTION BLOCK
Änderung							fuer RST2013/for RST2013

Weitergabe sowie Vervielfältigung dieses Dokuments, Verwertung und Mitteilung seines Inhalts sind verboten, soweit nicht ausdrücklich gestattet. The reproduction, distribution and utilization of this document as well as the communication of its contents to others without express autorization is prohibited.

Сайт: https://samoreg.ru | Телефон: +7 (343) 237-25-22 | Почта: 1@2372522.ru